REDEFINING THE BOUNDARIES

OF THERMAL INKJET TECHNOLOGY

RYNAN R20 REACH

THE NEXT GENERATION OF RYNAN PRINTERS

MEK-BASED INKS

- Touch screen controller
- Dual printhead support
- Message length up to 2m
- Printing speed up to 40m/min at 300x200dpi
- Throw distance up to 10mm
- Universal UI software
- Data cable standard 2m

RYNAN® TECHNOLOGIES

RYNAN Technologies Pte Ltd.
60 Paya Lebar Road #10-39 Paya Lebar Square, Singapore 409051
+65 6871 8922 | www.rynantech.com | info@rynantech.com

RYNAN R20 REACH

TECHNICAL SPECIFICATIONS	
Printing Technologies	Thermal Inkjet Technology from Funai, Japan
Dimensions (LxWxH)	Controller (193 x 130.3 x 34.5 mm) 0.5 inch printhead (210.4x60.80x74.15mm)
Weight	Controller (888 grams), Printhead max (540 grams)
Display	Touch screen 7 inches
Power Supply	AC 100V–240V, 50/60Hz, DC 24V 2.5A, Maximum power consumption: 60W
Resolutions	Max 300x600dpi
Print speed	Max 29m/min @ 300x300dpi - 40m/min @ 300x200dpi
Density	Up to 3 levels of optical density
Throw Distance	Up to 10mm
FEATURES	
Printability	Text, Counter, Box/Lot, Datetime, Expiry Date, Julian Date, Shiftcode, Image, Database (TXT, CSV, SQL, MySQL, SQLite, JSON) Barcodes (Code 11, Code 39, Code 128, EAN, QR, Datamatrix, GS1 Datamatrix...) POD (Print online data)
Advance	Free design in template up to 1 inch (2 heads) Integrate with other devices (PLC, Camera, Checkweigher...) via RJ45 Real-time Printing WYSIWYG (what you see is what you get) Data upload, Backup & Recovery via USB
External connection	Build in sensor External Sensor, Encoder and Alarm beacon
Length Template	Maximum length of template up to 2m
Menu languages	English (default), German, Vietnamese, Chinese, Korean, Russian, Turkish, Portuguese, Spanish, Polish, Greek and Italian
Memory	Store up to 8GB template on the printer's memory
Printable characters	Windows true fonts
Ink Management	Automatic recognition ink type and ink parameters Nozzle warming, auto-jet and self-cleaning capabilities to extend cartridge lifetime Nozzle status checking
Ink Solutions	Solvent ink for porous and non porous material Aqueous ink for printing on porous and semi porous material Supports ink colour: ●
Operating condition	Temperature 5 - 50°C and 90% air humidity, non-condensing

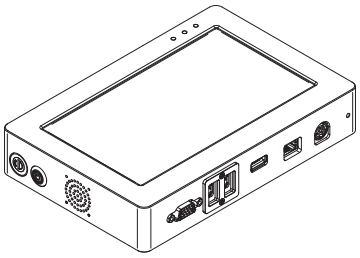

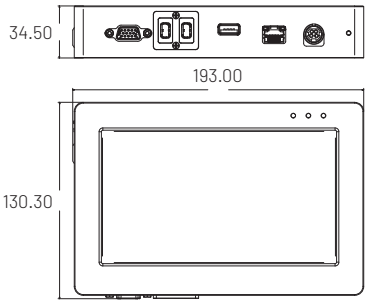

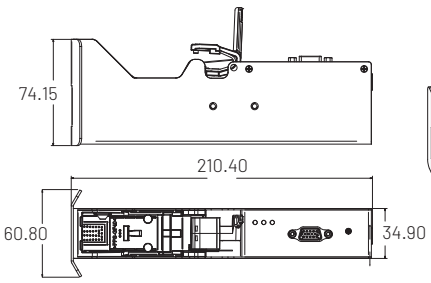

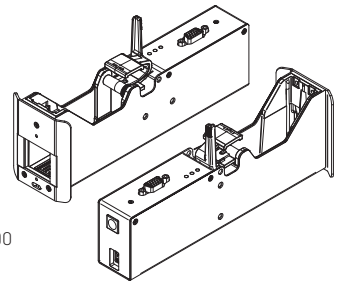

The information presented in this brochure, to the best of our knowledge, is accurate at the time of publication, and is presented as general information and no representation or warranty is expressly or impliedly given as to its accuracy, completeness or correctness. RYNAN Technologies reserves the right to make changes to this brochure and the contents herein, including without limitation, functionality, features, specifications, images, benefits, design, components, performance, and any other product information.